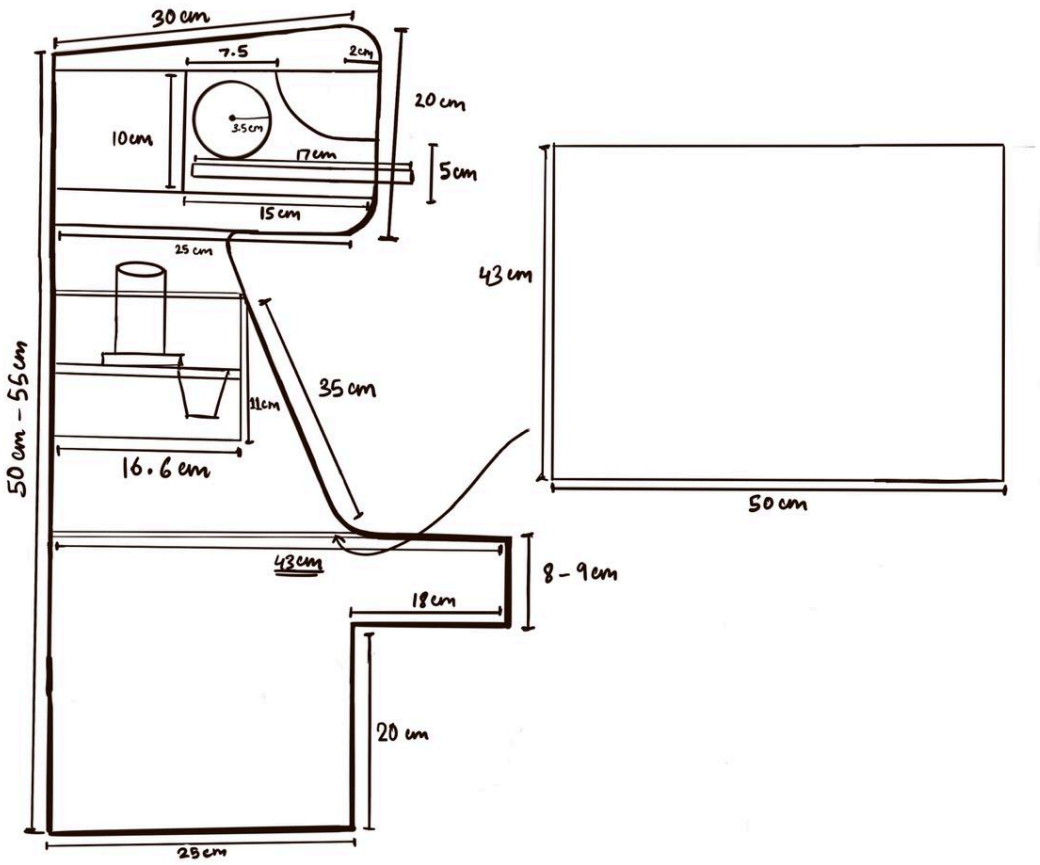
30 cm
7.5
2cm
20 cm
10cm
3.5cm
7cm
5cm
15 cm
25 cm
43 cm
50 cm - 55 cm
35 cm
21cm
16.6 cm
50 cm
43cm
8 - 9cm
18cm
20 cm
25cm

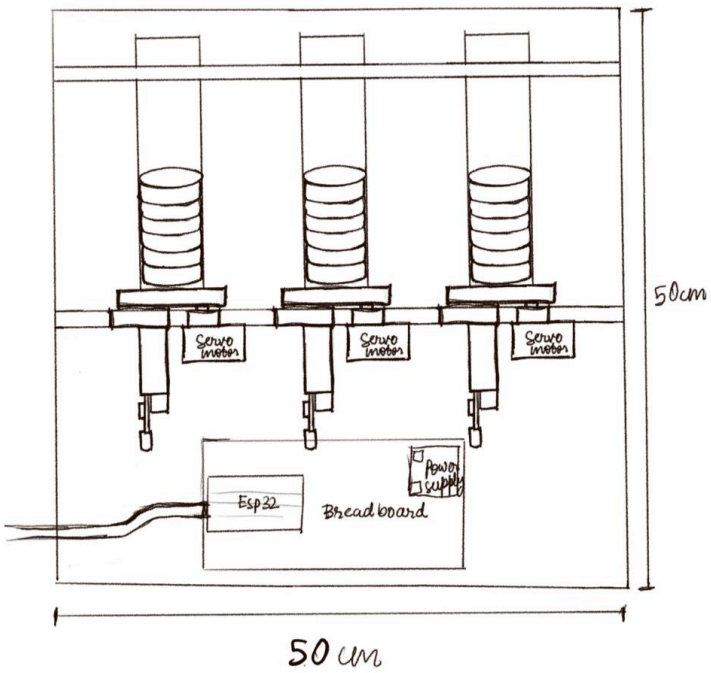

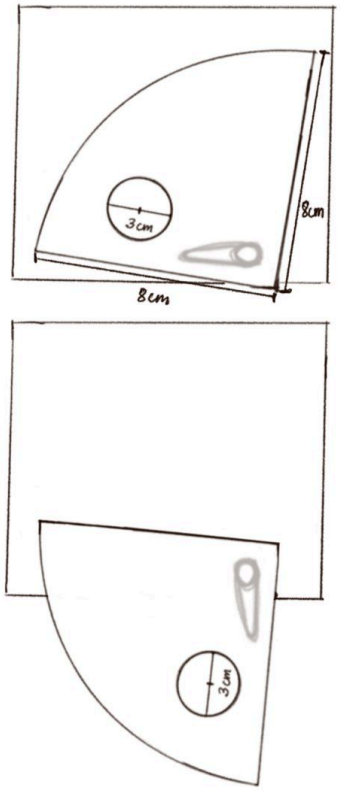

To ensure this meets the standards of a formal submission document, I have restructured the information into professional categories: **Rationalization of Physical Materials** (explaining the pivot from MDF) and **Technical Component Integration**.

---

1. Material Selection & Design Rationale

1.1 Structural Pivot: From MDF to Corrugated Cardboard

The initial design phase considered **MDF (Medium-Density Fibreboard)** for the chassis. However, after evaluating the project timeline and the need for iterative testing, **Corrugated Cardboard** was selected as the primary structural material for the following reasons:

- **Iterative Flexibility:** Unlike laser-cut MDF, which requires finalized CAD files and lengthy machining times, cardboard allowed for "on-the-fly" modifications. This was essential for adjusting the housing to fit internal electronic components.
- **Prototyping Speed:** Using cardboard bypassed the bottleneck of laser-cutter availability, allowing the team to produce both the functional prototype and the final model within the tight submission window.

- **Weight Optimization:** The lighter frame reduced the load on the adhesive joints and allowed for easier transport and assembly.

1.2 Functional Surfaces: OHP Sheets & Paper

- **OHP (Overhead Projector) Sheets:** Selected for the candy reservoirs due to their **transparency** (allowing users to monitor stock levels) and **low-friction surface**, which ensures consistent candy flow and prevents jamming.
- **Paper & Masking Tape:** Paper was utilized for structural lining and aesthetic finishing, while masking tape served as a temporary fastener during the calibration of the dispensing mechanisms.
- **Adhesives:** High-strength glue was applied for permanent structural bonding once the mechanical dimensions were verified through testing.

---

2. Electronic Component Logic

The system utilizes a sophisticated array of sensors and actuators to automate the dispensing process and provide user feedback.

2.1 Input & Detection System

- **IR Sensors (x3):** These provide non-contact detection, triggering the dispensing sequence when a user's hand or container is placed in the designated zone.
- **Reed Switches (x9) & Magnets (x13):** This magnetic array acts as a limit-switching system. By mounting magnets on the moving dispensing arms and reed switches on the frame, the system gains precise feedback on the physical position of the mechanisms, ensuring the motors return to a "closed" state after every cycle.

2.2 Actuation & Motion

- **Servo Motors (x3):** Chosen for their ability to provide **precise angular positioning**. This allows the software to control the exact aperture of the dispenser, ensuring only a specific volume of candy is released per trigger.

2.3 Visual Feedback & Aesthetics

- **Neopixel & LEDs (x12):** These serve as the User Interface (UI). The Neopixel provides encoded status updates (e.g., system ready, dispensing, or error), while the standard LEDs provide localized signaling for different candy tracks.
- **Fairy Lights:** Integrated to enhance the visual appeal of the prototype, drawing user attention to the "interactive" nature of the device.

Component Category	Selected Material	Key Benefit
Chassis	Corrugated Cardboard	Rapid adjustment and ease of assembly.
Storage/Windows	OHP Sheets	Transparency and hygiene/flow efficiency.
Positioning	Reed Switches/Magnets	Reliable mechanical feedback without physical wear.
Dispensing	Servo Motors	High-precision control over mechanical movement.